Outside tube : ø 25 x 1,5 mm
Vertical tube : ø 15 x 1,2 mm (9x)
Vertical wire : NA
Horizontal wire : NA
Material : Steel
Surface : hot dip galvanized
Weight : 11 KG

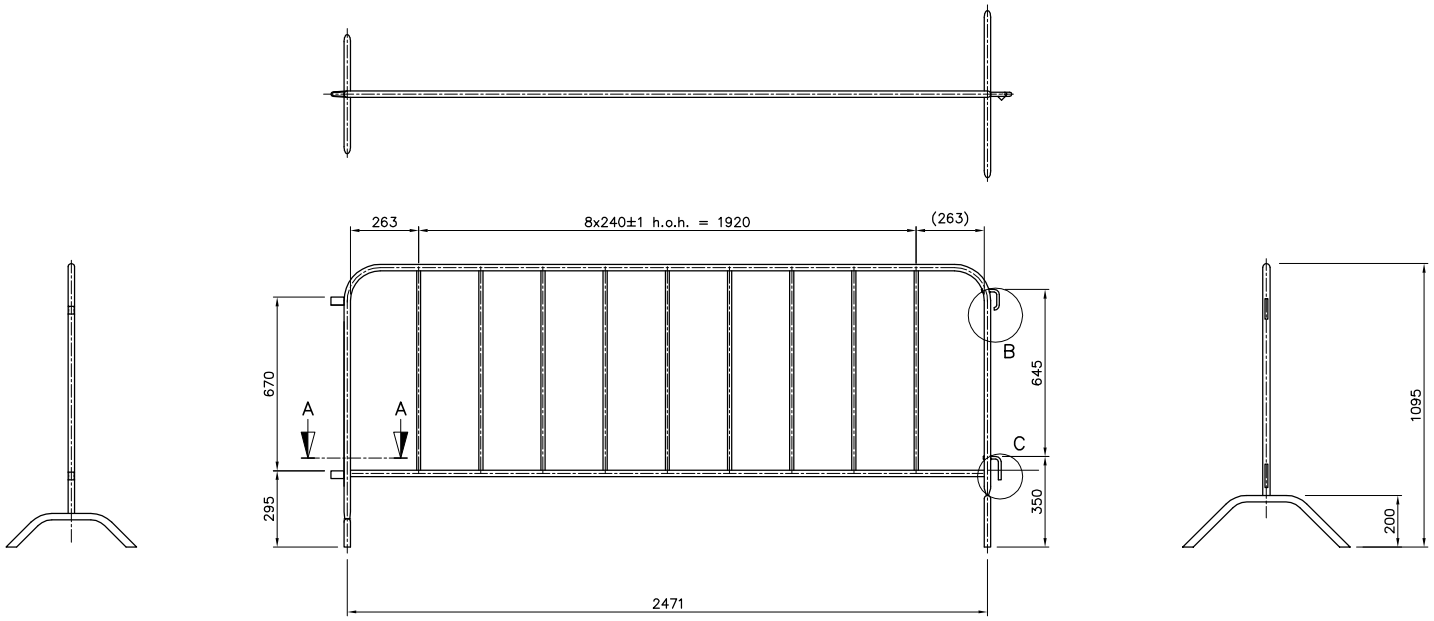

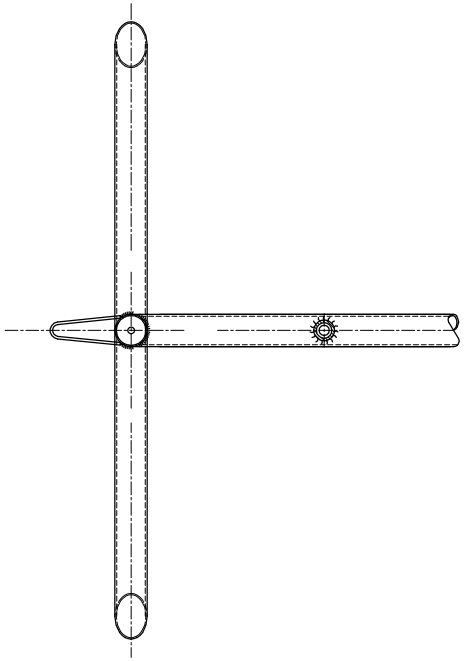

QUERSCHNITT A–A
Maßstab 1:2

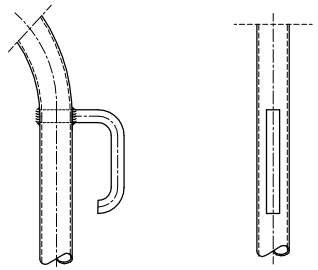

DETAIL B
Maßstab 1:2

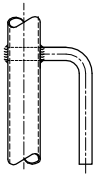

DETAIL C
Maßstab 1:2

no.	revision		name	date	checked by

scale : 1:10	date : 040512	principal :	sheet : 1v1
drawn by : HG	tolerance : ±2, ±1°		format : A1
checked by : HG	unit : mm		

P.O. Box 30, 5688 ZG Oirschot
The Netherlands
Phone +31 (0)499–551255
Fax +31 (0)499–551789

project : HERAS MOBILE FENCING & SECURITY

drawing title : DRANGHEK ø25 mm

art.nr.: C..2255

american projection

drawing no. — HMF — A/069 / rev. no. 0

This drawing is property of HERAS. Reproduction or disclosure to third parties in any form whatsoever is not allowed without explicit written concent of HERAS.

G:/Bouwtek/CAD/Productordner/HMFA069.dwg